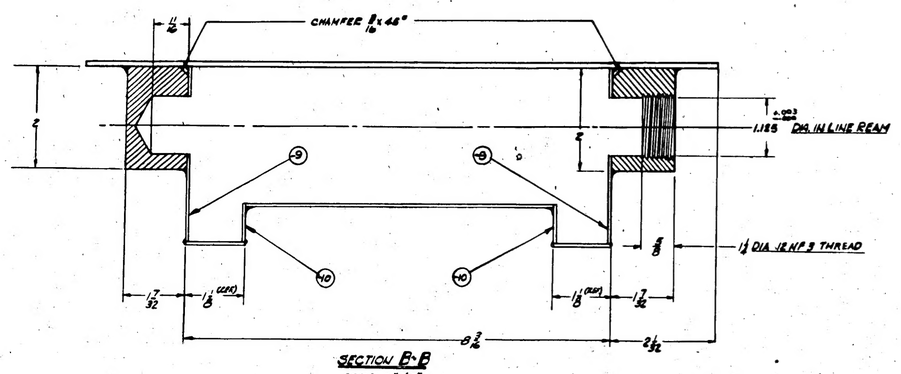

SECTION B-B
SCALE: 12"=1'-0"

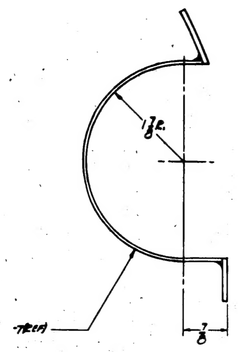

SECTION A-A
SCALE: 12"=1'-0"

LET	ALTERATION	DATE	BY	LET	ALTERATION	DATE	BY

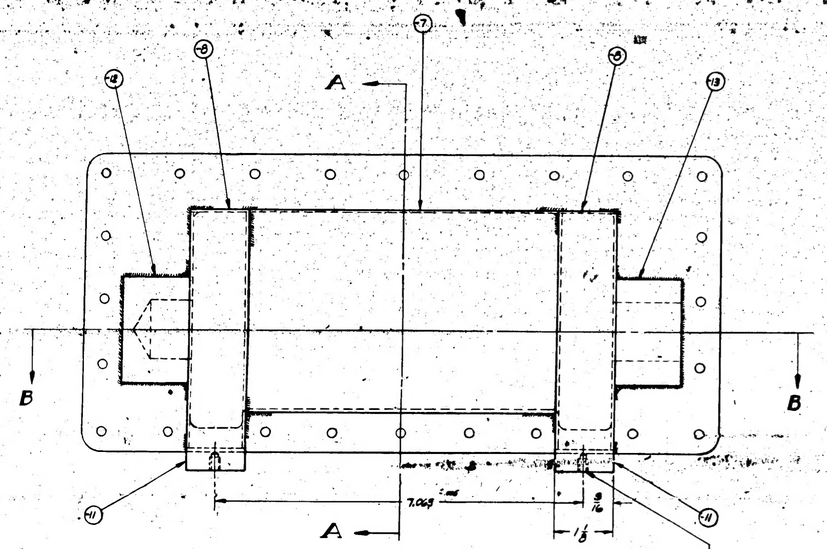

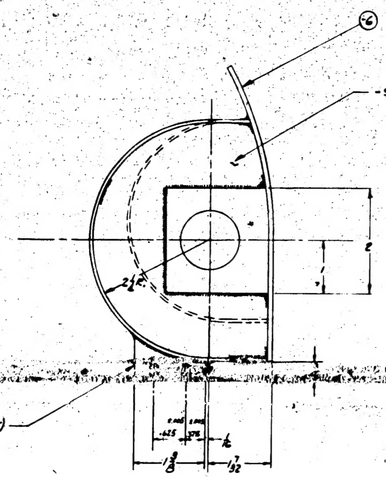

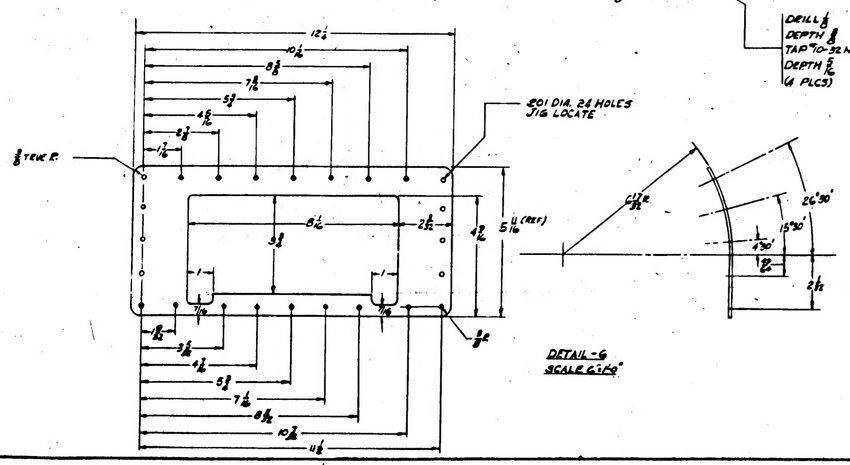

DETAIL-G
SCALE 6"=1'-0"

NOTE: ALL WELDED JOINTS TO BE WATER TIGHT

ALTERNATE & INTERCHANGEABLE WITH
28B5813 CASTING

MATERIALS NOTE:

		MATERIAL	SPEC.
-6	MAY BE MADE FROM:	A CHR. MOLY SHEET STL	AN-QQ-S-685
		B CARBON SHEET STL	AN-S-11
-7		A CHR. MOLY SHEET STL	AN-QQ-S-685
		B CARBON SHEET STL	AN-S-11
-8		A CHR. MOLY SHEET STL	AN-QQ-S-685
		B CARBON SHEET STL	AN-S-11
-9		A CHR. MOLY SHEET STL	AN-QQ-S-685
		B CARBON SHEET STL	AN-S-11
-10		A CHR. MOLY SHEET STL	AN-QQ-S-685
		B CARBON SHEET STL	AN-S-11
-11		A CHR. MOLY BAR STL	AN-QQ-S-684
		B LOW CARBON BAR STL	AN-QQ-S-646
-12		A CHR. MOLY BAR STL	AN-QQ-S-684
		B LOW CARBON BAR STL	AN-QQ-S-646
-13		A CHR. MOLY BAR STL	AN-QQ-S-684
	MAY BE MADE FROM	B LOW CARBON BAR STL	AN-QQ-S-646

NORMALIZE CHR. MOLY STEELS 90,000-125,000 #/□"
CARBON STEELS - NO HEAT TREAT

MOC 272-A-2

APPROVED FOR TOOLING BY
C. SHILK 9-15-43

-13	2 x 2 x 1/4	NOTED	NOTED	1
-12	1 1/2 x 1 1/2 x 1/4			2
-11	1 1/2 x 1 1/2 x 1/4			2
-10	.062 x 4 1/2 x 3 1/4			2
-9	.062 x 3 3/4 x 3 1/4			2
-8	.062 x 7 3/8 x 1 1/4			2
-7	.062 x 3 1/2 x 1 1/4			1
-6	.062 x 5 1/2 x 1 1/4			1
PART No.	STOCK	MATERIAL	SPEC.	LN	LN	LN	LN	LN	LN	LN	LN
				REQ	REQ	REQ	REQ	REQ	REQ	REQ	REQ
	PARTS LIST FOR ASSY.			-0	-2	-3	-4	-5			

MAT'L 28B5811			
MODEL	PRODT. NUMBER		
REQUIREMENTS PER AIRPLANE			
REPLACES		ENG. SP.	
REPLACED BY		DR. NO.	
LIST TO STANDARD No. 1		SCALE 12" = 1'-0"	
1 7/8 R x 3/8"			
STAMP PART NUMBER WHERE SHOWN			

AS		8-11-43	
HAVE NOTED	CAD PLATE	LEVELING	
HEAT TREAT	FINISH	GRAIN	FINISH STRUCT.	MAT.	STRUCT.	ENG.
NAME HOUSING ASSY-BOMBERS WINDOW SHUTTER OPERATING MECHANISM			OPP HAND NONE
			STOCK J 28B5826

R 28B5826

H 168